Since 1967
ASUNG Plastic Valve
Clean Flow Tech

HEAD OFFICE
ASUNG Bldg, 544 Gyeongin-Ro, Guro-Gu, Seoul (08278)
Tel : 82-2-2671-1900~5 Fax : 82-2-2671-5687

BUSAN BRANCH
B-202 Seo-Myenjeonpo shopping arcade, 33 Jeonpo-Daero,
255 Beon-gil, Busanjin-Gu, Busan (47247)
Tel : 82-51-818-7781~4 Fax : 82-51-804-4060

FACTORY
280, Haean-Ro, Danwon-Gu, Ansan-Si, Gyeonggi-Do (15612)
Tel : 82-31-494-8193~4 Fax : 82-31-492-6650

28-110, Bugokgongdan 4-Gil, Dangjin-Si, Chungcheongnam-Do (31721)
Tel : 82-41-357-8192~5 Fax : 82-41-357-8676

CHINA
A-2115 Oriental International Plaza, 85 LouShanGuan Rd,
Changning District, Shanghai, China, 200336
Office : 86-21-62782288 #215 Fax : 86-21-6278-3723

HONG KONG
Rm401-403, 4/F, Honour Industrial Centre, 6 Sun Yip St.,
Chai Wan, Hong Kong

Homepage : www.asungvalve.com
E-mail : sales@asungvalve.com

TCG

Công ty cổ phần TC Toàn Cầu Việt Nam
VN GLOBAL TC., JSC
Piping Solution
Ha Noi 5 Floor HUD3 tower, 121-123 To Hieu,Ha Dong
Tel/Fax +84 24 3201 1590 | Hotline +84 90 222 1290
www.tctoancau.com | contact@tctoancau.com

Nhà phân phối ủy quyền sản phẩm ASUNG
ASUNG Authorized distributor

※ No part of this publication including photos, data and designs may be reproduced, distributed, or transmitted in any form or by any means without the prior permission of the publisher. Reproduction or copy of this work without permission can be punished by Korea government law.

ASUNG

CLEAN PVC Valves, Pipe & Fitting

February 2017
Vol. 001

Since
1967

Since **1967**

ASUNG of the World

- **South Korea**
  Seoul : Head Office
  Busan : Branch
  Ansan : Factory
  Dangjin : Factory

- **China**
  Shanghai : Representative Office
  Hong Kong : Representative Office

- **North / Central / South America**
  Canada, USA
  Chile, Brazil

- **Asia**
  Azerbaijan, China, Indonesia, Japan, Kuwait, Malaysia, Myanmar, Philippines, Singapore, Taipei, Thailand, Vietnam

- **Europe**
  Bulgaria

- **Africa**
  Nigeria

- **Oceania**
  Australia

Pipe and Fitting for high-purity water and high-purity chemicals

Ultra Purify Water Piping System

ASUNG CLEAN FLOW™

06 Features / Application
07 Quality
08 Result of the Physical Properties & Performance Test
09 Leaching Criteria and Test Result
10 Leaching Test Result of Valves and Fittings
TOC Test Result of Valves and Fittings
11 Comparison of Pipes / Comparison of Surface roughness
12 Internal Pressure Creep Test
EPDM Dissolution Test Result
13 The Manufacturing Processes of ASUNG's Clean PVC Valves & Fittings
The Manufacturing Processes of ASUNG's Clean PVC Pipes
14 Installation Data
18 UNION BALL VALVE
24 BALL VALVE (Flange)
26 UNION DIAPHRAGM VALVE (Socket)
30 DIAPHRAGM VALVE (Flange)
34 BUTTERFLY VALVE
38 CHECK VALVE
44 SWING CHECK VALVE
50 AUTOMATIC BALL VALVE (Flange)
52 AUTOMATIC DIAPHRAGM VALVE (Flange)
54 AUTOMATIC BUTTERFLY VALVE
58 PIPE
59 CAP
60 90° ELBOW
61 45° ELBOW
62 TEE
63 REDUCER TEE
67 REDUCER
69 SOCKET
70 FAUCET SOCKET
71 MALE ADAPTER
72 UNION
74 T.S FLANGE
75 BLIND FLANGE

ASUNG CLEAN FLOW™
Thermo Plastic Valves

Features

1) The Product uses clean PVC materials which are extremely low in leaching of heavy metals and highly resistant to impact.
2) The surface roughness and smoothness are outstanding, and there are virtually no irregularities or pores which would cause the proliferation of live bacteria.
3) The level of TOC leaching is very low.
4) It is highly durable and resistant to pure and ultrapure water as well as general chemicals.
5) The clean PVC pipes are extruded in a clean room.
6) A dust free cutter is used to cut the pipe, a clear cap is inserted at the end of the pipe, and then the pipe is packed in a double-vinyl bag to prevent the bag from tearing, and the valves and fittings are de-oiled and cleaned to ensure that they are shipped as an oil-free product.

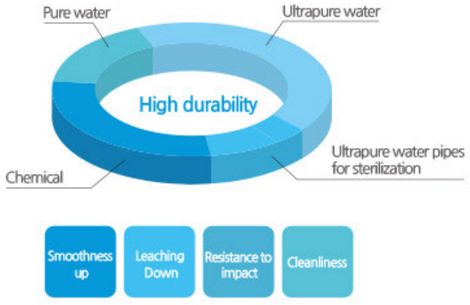

Application

* Pure water pipeline, Ultrapure water pipeline, Ultrapure water pipes for sterilization, Pure water medium temperature pipe for sterilization and etc.

Quality

*** Material**
Asung's Clean PVC pipes and fittings are made of selected vinyl chloride resin with a small amount of quality thermal stabilizer, activators and pigments.

*** Specification**
Asung's Clean PVC pipes are manufactured in accordance with the KS M 3401 standard for unplasticized poly vinyl chloride pipes.

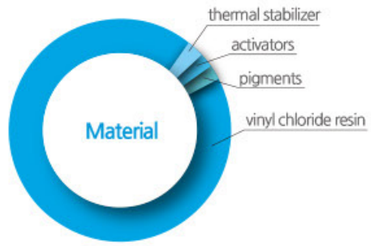

Particular	Test Item	Test Method	Remarks
Dimensions	Average I.D Thickness	KS M 3401	As same as the test items used by the Korean Agency for Technology and Standards to certify quality products * ASUNG's CLEAN PVC PIPES were NeP accredited by the Ministry of Commerce, Industry and Energy on Sep. 6, 2005.
Basic properties	Tensile strength Water pressure Flattening test Vicat softening temperature	KS M 3401	
Fitness to purpose	Inner roughness Electrical conductivity Leaching test	KS B 0161 KS M 0100 Appendix#2	

ASUNG CLEAN FLOW™
Thermo Plastic Valves

Result of the Physical Properties & Performance Test

※ Tested by : Korea Testing & Research Institute (KTR)

Test Item	Performance	Test Result	Remarks
Tension	To be 4.7KN/cm2(480kgf/cm2) or above at 15°C	508.6kgf/㎠	
Water pressure	To be free of leaks or defects for a minute upon application of the ambient water pressure of 2.45MPa(25kgf/cm2)	Normal	
Water pressure on joints	To be free of leaks for a minute upon application of the ambient water pressure of 2.45MPa(25kgf/cm2)	Normal	
Impact	To be free of damage at the specified height at 0°C and 20°C	Normal	
Flatness	To be free of splits or cracks when pressed until its O.D is half the size at 23°C	Normal	
Softening temperature	76°C or above	82℃	
Heavy metal leaching	To be determined by the Table as below at room temperature (a reference test)	Normal	
Inner flatness	Rmax (JIS) 0.5μm or below	0.06㎛	KS B 0161

Leaching Criteria and Test Result

※ Tested by : Korea Testing & Research Institute (KTR)

Item	Criteria	Test Result on ASUNG CLEAN PIPE
Electrolysis	2㎲/㎝	1㎲/㎝
Pb	2 PPb or below	Not detected
Ca	100 PPb or below	10.6PPb
Zn	20 PPb or below	14.3PPb
Sn	10 PPb or below	Not detected
Na	50 PPb or below	0.15PPb
K	10 PPb or below	0.4PPb
Mg	5 PPb or below	1PPb
Mn	5 PPb or below	0.8PPb
Ba	5 PPb or below	Not detected
Si	15 PPb or below	Not detected
Fe	10 PPb or below	1PPb
Al	10 PPb or below	1PPb

ASUNG CLEAN FLOW™
Thermo Plastic Valves

Leaching Test Result of Valves and Fittings

※ Tested by : Korea Testing & Research Institute (KTR)

TEST VALVE TYPE	15 DAY					30 DAY				
	Pb (PPb)	Ca (PPb)	Zn (PPb)	Cd (PPb)	Sn (PPb)	Pb (PPb)	Ca (PPb)	Zn (PPb)	Cd (PPb)	Sn (PPb)
UNION BALL VALVE	ND	32	20	ND	ND	ND	28	175	ND	ND
DIAPHRAGM VALVE	ND	58	14	ND	ND	ND	59	43	ND	ND

※REMARK
1]) VALVE SIZE : 25A
2] Seal Material of union ball valve : PTFE, Diaphragm Material of Diaphragm valve : EPDM+PTFE
3] ND = Not detected

TOC Test Result of Valves and Fittings

※ Tested by: Korea Testing & Research Institute (KTR)

TEST VALVE TYPE	Seal / Diaphragm Material TEST TYPE	TOC condition (ppm)		
		24hrs.(20°C)	24hrs.(40°C)	30 days (room temperature)
UNION BALL VALVE	EPDM	0.35	1.5	2.1
DIAPHRAGM VALVE	EPDM+PTFE	0.8	1.3	0.5

Comparison of Pipes

※ Tested by : Korea Testing & Research Institute (KTR)

Item		General PVC Products	Asung's Clean Products	Foreign Clean products
Surface roughness		0.73㎛(RA)	0.05㎛(RA)	0.06㎛(RA)
Dissolving test (15 days)	Pb	9PPb	Not detected	Not detected
	Ca	30,000PPb	10.6PPb	43PPb
	Zn	10PPb	14.3PPb	20.1PPb
	Sn	5PPb	Not detected	Not detected
Electrical conductivity		30.0(㎲/㎝)	1이하(㎲/㎝)	1이하(㎲/㎝)

Comparison of Surface roughness

General PVC Products (Surface roughness)

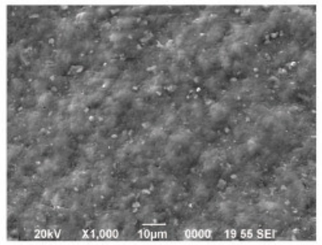

The photo showing the surface enlarged by 1,000 times
0.73 μm(RA)

Asung's Products (Surface roughness)

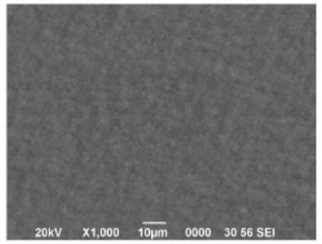

The photo showing the surface enlarged by 1,000 times
0.05μm(RA)

Foreign products (Surface roughness)

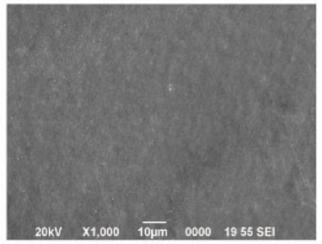

The photo showing the surface enlarged by 1,000 times
0.06μm(RA)

※ Tested by : Korea Testing & Research Institute (KTR)

ASUNG CLEAN FLOW™
Thermo Plastic Valves

Internal Pressure Creep Test (changes in OD and length)

※ Tested by: Korea Testing & Research Institute (KTR)

Particular		Unit	Criteria	Test Result		Test Method
Internal Pressure Creep Test		-	4kgf/㎠ 60℃ 240h	Normal		KS M ISO 1167
	측정조건	시간(h)		외경	길이	
OD and length	60℃, 0kgf/㎠	0	mm	114.9	635.5	KS M ISO 3126
	60℃, 4kgf/㎠	1		115.1	635.7	
	60℃, 4kgf/㎠	3		115.1	635.7	
	60℃, 4kgf/㎠	6		115.1	635.8	
	60℃, 4kgf/㎠	9		115.1	635.8	
	60℃, 4kgf/㎠	24		115.2	635.8	
	60℃, 4kgf/㎠	48		115.2	635.8	
	60℃, 4kgf/㎠	72		115.2	635.8	
	60℃, 4kgf/㎠	168		115.2	635.8	
	60℃, 4kgf/㎠	240		115.2	635.8	

◆ The measurement was made 100mm away from each end cap. At the initial measurement at room temperature without any internal pressure, the OD was 114.6mm and the length was 634.5mm.

EPDM Dissolution Test Result

※ Tested by: Korea Testing & Research Institute (KTR)

Item		Asung's Products	Foreign products
40℃ x 24hour	Pb	Not detected	Not detected
	Ca	0.3PPb	0.35PPb
	Zn	Not detected	0.25PPb
	Cd	Not detected	Not detected
	Sn	Not detected	Not detected

The Manufacturing Processes of ASUNG's Clean PVC Valves & Fittings

The Clean PVC pipes, fittings and valves of Asung used in the ultrapure water production equipment and ultrapure water supply pipeline are oil free. They are cleaned with a surfactant, pure water and ultrapure water. They are shipped after being dried, assembled and packed in a clean room.

De-oil Process

Pre-wash inspection
Only the valves and fittings that have passed the appearance, dimensional and internal pressure tests are used.

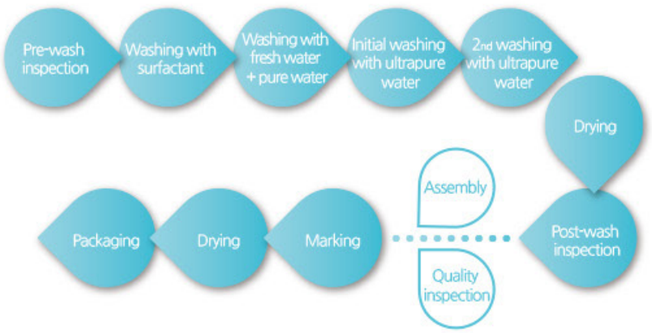

Processes of Asung's Clean PVC Pipes

Pipe Production Processes

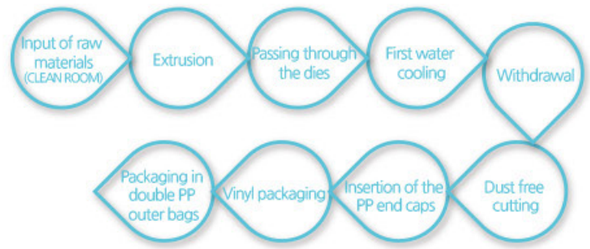

Installation Data

Handling and Storage

1. Handling

Handle with care to avoid external impact as valves, pipes and fittings are plastic products.

2. Storage

- Pipes and fittings should be stored inside. Cover them to avoid direct sunlight, or store in shade to prevent damage to the appearance of plastic products.
- Pipes are best stored on the shelf for long-term storage. If unavoidable, place wooden blocks on level ground and stack the pipes on top to the maximum of 4 layers to prevent deformation of the pipe.
- At all times, the products should be stored in such a way that their packaging is not damaged.

Method and Procedure of Joint Bonding

1. Pipe Cutting

Use the pipe cutter to cut the pipe ensuring that the cutting surface is at a right angle.

13Ø ~ 50Ø

13Ø ~ 150Ø

40Ø ~ 150Ø

2. Rounding of the inner and outer cut surface of the pipe

The end of the pipe on the outer surface where the pipe is inserted into another shall be rounded at a minimum angle of 45°. The purpose of rounding is to prevent the dropping of bond on the rounded part when adhesive flows down.
(About 8mm for 100A or above; about 5mm for 50A or above; and about 3mm for pipes under 50A)

※ Caution

The rounding tool must be used beneath the pipe end to prevent pipe debris from entering inside the pipe. Rounding of the outer surface is essential as it makes insertion easy and prevents the adhesive from overflowing

3. Removal of foreign matter from the joint of pipes and fittings

Use a dry cloth or similar tools to remove foreign materials from the outer surface of the pipe and the inner surface of the fitting where the adhesive would be applied to.

4. Checkpoint before connecting the pipe and the fitting

Insert the pipe into the fitting before applying the adhesive to check the zero point. Stop pushing when 1/3 - 2/3 of the pipe is inserted to check they couple together well.

5. Marking on the pipe

Before inserting the pipe, measure the insertion depth of the fitting and mark it on the pipe. You can check if the pipe is correctly inserted by this mark.

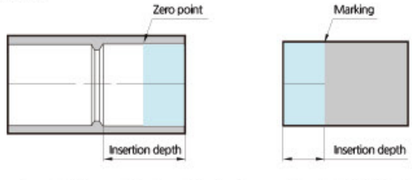

* Zero point (The point where the pipe is coupled with the fitting)

6. Installation of the jig and fixture

For large diameter pipe works, install the jig and fixture (level block and wire) on the pipe and on the fitting for insertion.
Fix and maintain the jig and fixture to prevent the pipe from coming off after insertion.
Use an inserting device (wire tug tool) for pipes 65A or above.

Up to 50A

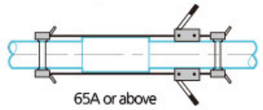
65A or above

※ Caution

- Check that the pipe is inserted up to the marked line.
  DO NOT use a hammer to insert the pipe.

7. Application of Adhesive

Apply the adhesive as quickly as possible inside the fitting and on the outer surface of the pipe up to the marked line. Use a smaller amount inside the fitting than for the pipe outside.

Normal construction

Abnormal construction

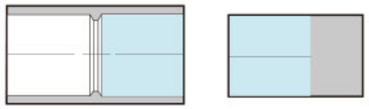

※ Caution

- Make sure that excessive adhesive does not enter into the fitting.
- Insert the pipe squarely avoiding twisting during insertion. The pipe may be pushed out due to the tape on the fitting, and therefore the pipe must be held and maintained for about a minute in the summer or 2 minutes at a minimum in the winter after being inserted into the fitting up to the marked point.

8. To Insert the Pipe

1) Apply adhesive once on the pipe while it is fixed in a vise.
2) Rotate 360° and insert the fitting onto the pipe up to the zero point.
3) Quickly remove the fitting from the pipe and apply adhesive for the second time.
4) Insert the fitting up to the marked line.

Quickly removing the fitting from the pipe after the first application of adhesive and rotation of the fitting 360° to insert it into the pipe up to the zero point

Quickly inserting the fitting after the second application of adhesive

9. Curing and Ventilation

The pipes and fitting upon installation must be left to cure for a sufficient period of time. The water pressure test must not be conducted on them until the adhesive is completely dry. Do not move the pipe before the adhesive is completely dry. Ventilate the area as volatile fumes may be emitted from the adhesive.

* Poor ventilation after the plumbing work may generate troubles inside the pipeline.

▲ Pipeline Holding Time, Time to move, Curing Period

Operating temp	5~15℃			15~35℃		
SIZE	15~75(80)	100~200	250~300	15~75(80)	100~200	250~300
Pipeline Holding Time	2min.	3min.	4min.	1min.	1min.	2min.
Time to move	60min.	90min.	120min.	30min.	45min.	60min.
Curing Period	24hrs.	48hrs.	48hrs.	12hrs.	24hrs.	24hrs.

▲ Amount of adhesive application by size

Unit : (g)

SIZE	Adhesive Requirements	SIZE	Adhesive Requirements
15A	0.6	65A	4.8
20A	1.2	80A	6.3
25A	1.5	100A	10
30A	1.8	125A	15
40A	2.6	150A	22
50A	3.7	200A	30

ASUNG CLEAN FLOW™

Valves System

Pipe and Fitting for high-purity water and high-purity chemicals

As the IT and bio industries are advancing further, these industries demand ultrapure water of high quality to improve product quality and safety. Many efforts have been made by Asung to develop pipes that have a low level of heavy metal leaching and a high level of smoothness on the inner surface. The company successfully produced Clean PVC products which were accredited with the NeP certificate from the Ministry of Commerce, Industry and Energy and are supplied to manufacturers requiring ultrapure water, including semi-conductor, LCD and PDP manufacturers in Korea. Asung is committed to the ceaseless R&D of pipes, fittings and valve systems geared towards the supply of ultrapure water.

ASUNG CLEAN FLOW™
Thermo Plastic Valves

UNION BALL VALVE (Socket)

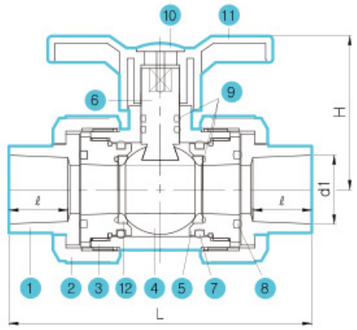

A-TYPE 15A~50A

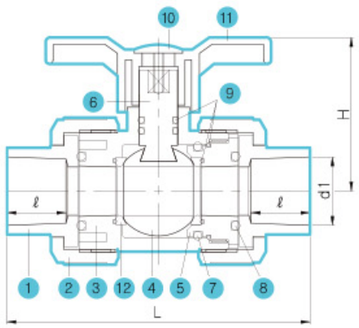

B-TYPE 15A~50A

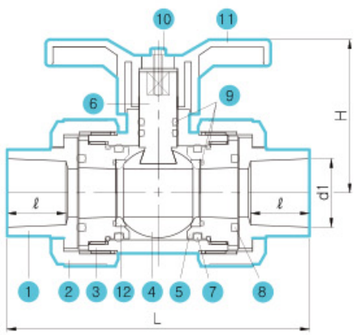

65A~100A

NO.	PARTS	MATERIALS
1	BODY CAP	CLEAN PVC
2	GLAND CAP	CLEAN PVC
3	BODY	CLEAN PVC
4	BALL	CLEAN PVC
5	CARRIER	CLEAN PVC
6	STEM	CLEAN PVC
7	SIDE O-RING	EPDM, FPM, FPM-F
8	FACE O-RING	EPDM, FPM, FPM-F
9	O-RING	EPDM, FPM, FPM-F
10	HANDEL BOLT	SS41 (ABS COATED) EPDM : BLUE COLOR FPM, FPM-F : IVORY COLOR
11	HANDLE	PP
12	NIP SEAL	PTFE

DIMENSION

unit:mm

Size \ Parts		d1	L	ℓ	H
A - TYPE	15A	22.40	115.0	22.5	56.0
	20A	26.45	129.0	24.0	64.0
	25A	32.55	157.0	32.0	72.0
	30A	38.60	160.0	30.0	79.0
	40A	48.70	192.0	35.5	92.0
	50A	60.80	219.0	41.0	95.0
B - TYPE	15A	22.40	117.0	22.5	56.0
	20A	26.45	129.0	24.0	65.5
	25A	32.55	157.0	32.0	73.0
	30A	38.60	160.5	30.0	80.5
	40A	48.70	186.5	35.5	91.0
	50A	60.80	214.5	41.0	102.0
	65A	76.6	244.0	44.5	116.5
	80A	89.6	302.0	54.5	135.0
	100A	114.7	367.0	67.0	172.0

* A-TYPE is no compatible with B-TYPE

ASUNG CLEAN FLOW™
Thermo Plastic Valves

UNION BALL VALVE (Thread)

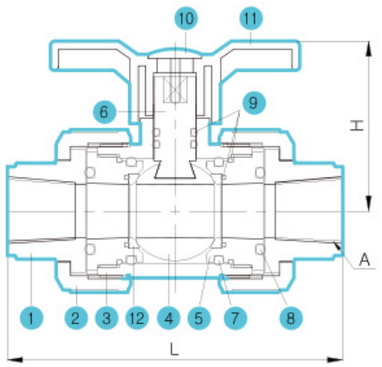

NO.	PARTS	MATERIALS
1	BODY CAP	CLEAN PVC
2	GLAND CAP	CLEAN PVC
3	BODY	CLEAN PVC
4	BALL	CLEAN PVC
5	CARRIER	CLEAN PVC
6	STEM	CLEAN PVC
7	SIDE O-RING	EPDM, FPM, FPM-F
8	FACE O-RING	EPDM, FPM, FPM-F
9	O-RING	EPDM, FPM, FPM-F
10	HANDEL BOLT	SS41 (ABS COATED) EPDM : BLUE COLOR FPM, FPM-F : IVORY COLOR
11	HANDLE	PP
12	NIP SEAL	PTFE

DIMENSION

unit:mm

Size \ Parts	L	A	H
15A	103	Rc ½"	56
20A	116	Rc ¾"	64
25A	135	Rc 1"	72
30A	147	Rc 1-¼"	79
40A	172	Rc 1-½"	92
50A	196	Rc 2"	95

ASUNG CLEAN FLOW™
Thermo Plastic Valves

UNION BALL VALVE (Flange)

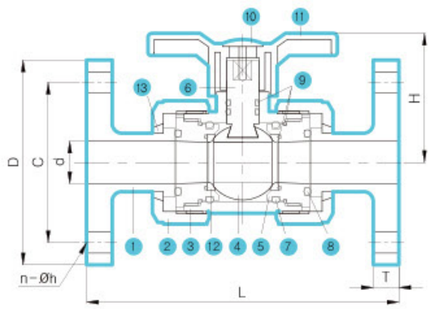

15A~50A

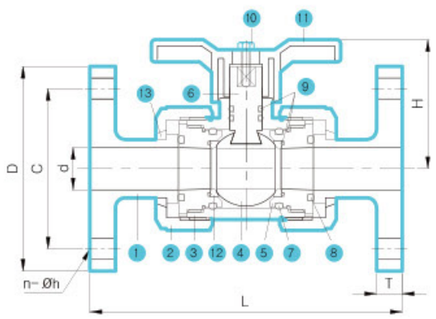

65A~100A

NO.	PARTS	MATERIALS
1	BODY CAP	CLEAN PVC
2	GLAND CAP	CLEAN PVC
3	BODY	CLEAN PVC
4	BALL	CLEAN PVC
5	CARRIER	CLEAN PVC
6	STEM	CLEAN PVC
7	SIDE O-RING	EPDM, FPM, FPM-F
8	FACE O-RING	EPDM, FPM, FPM-F
9	O-RING	EPDM, FPM, FPM-F
10	HANDEL BOLT	SS41 (ABS COATED) EPDM : BLUE COLOR FPM, FPM-F : IVORY COLOR
11	HANDLE	PP
12	NIP SEAL	PTFE
13	TAPER RING	PVC

DIMENSION

unit : mm

Parts / Size	d	L	T	JIS 10K			H
				D	C	n-Øh	
15A	15	143	14	95	70	4-15	55
20A	20	169	15	100	75	4-15	62
25A	25	184	16	125	90	4-19	72
30A	32	190	18	135	100	4-19	79
40A	40	208	17	140	105	4-19	90
50A	52	232	17	155	120	4-19	92
65A	65	262	20	175	140	4-19	115
80A	78	306	20	180	150	8-19	134
100A	100	373	22	210	175	8-19	169

ASUNG CLEAN FLOW™
Thermo Plastic Valves

BALL VALVE (Flange)

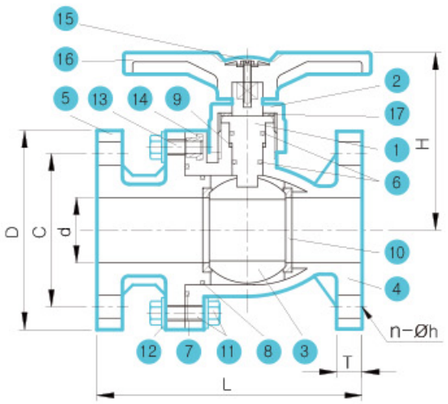

NO.	PARTS	MATERIALS
1	STEM	CLEAN PVC
2	GLAND CAP	CLEAN PVC
3	BALL	CLEAN PVC
4	BODY	CLEAN PVC
5	FLANGE	CLEAN PVC
6	STEM O-RING	EPDM, FPM
7	FACE O-RING	EPDM, FPM
8	SIDE O-RING	EPDM, FPM
9	STEM RING	PP, PTFE
10	NIP SEAL	PTFE
11	BOLT & NUT	SUS 304
12	WASHER	SUS 304
13	STUD BOLT	SUS 304
14	INSERTED NUT	BC
15	HANDEL CAP BOLT	SS41 (ABS COATED) EPDM : BLUE COLOR FPM : IVORY COLOR
16	HANDLE	PP
17	STEM WASHER	PP

DIMENSION

unit : mm

Parts / Size	d	L	T	JIS 10K			H
				D	C	n-Øh	
15A	16	148	15	95	70	4-15	84
20A	20	152	15	100	75	4-15	81
25A	25	172	17	125	90	4-19	92
30A	32	176	16	135	100	4-19	117
40A	41	193	19	140	105	4-19	121
50A	51	214	19	155	120	4-19	130
65A	66	262	21	175	140	4-19	184
80A	77	270	21	185	150	8-19	182
100A	102	301	23	210	175	8-19	194
125A	130	366	27	250	210	8-23	230
150A	144	364	25	280	240	8-23	229

ASUNG CLEAN FLOW™
Thermo Plastic Valves

UNION DIAPHRAGM VALVE (Socket)

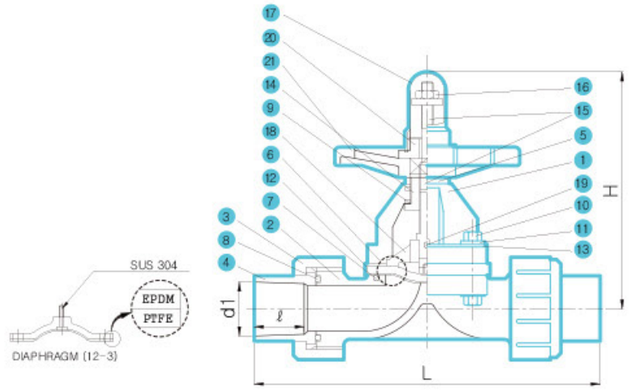

NO.	PARTS	MATERIALS
1	BONNET	CLEAN PVC
2	BODY	CLEAN PVC
3	GLAND CAP	CLEAN PVC
4	BODY CAP	CLEAN PVC
5	THRUST WASHER	CLEAN PVC
6-1 6-2	DIAPHRAGM	EPDM, FPM EPDM + PTFE
7	BONNET O-RING	EPDM, FPM N/A
8	FACE O-RING	EPDM, FPM
9	PTFE RING	PTFE N/A
10	BOLT & NUT	SUS 304

NO.	PARTS	MATERIALS
11	WASHER	SUS 304
12	DIAPHRAGM COVER PLATE	SUS 304
13	SUS PLATE	SUS 304 N/A
14	SLEEVE	BC
15	STEM+STUD BOLT UNIT	BC+SS41 (PLATING : Zn)
16	STOPPER NUTS	SS41 (PLATING : Zn)
17	GAUGE CAP	ACRYL
18	COMPRESSOR	AL
19	PIN	SCM
20	LOCK NUT	PP
21	HAND WHEEL	PP

DIMENSION

unit:mm

Size \ Parts	d1	L	ℓ	H
15A	22.40	153	22.5	138
20A	26.45	170	24.0	140
25A	32.55	203	32.0	144

ASUNG CLEAN FLOW™
Thermo Plastic Valves

UNION DIAPHRAGM VALVE (Socket)

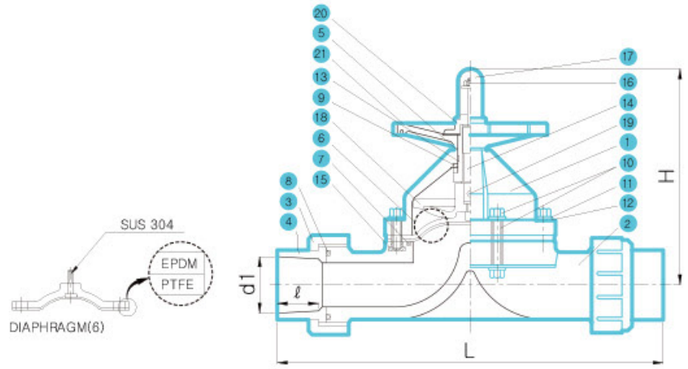

NO.	PARTS	MATERIALS
1	BONNET	CLEAN PVC
2	BODY	CLEAN PVC
3	GLAND CAP	CLEAN PVC
4	BODY CAP	CLEAN PVC
5	THRUST WASHER	CLEAN PVC
6-1 6-2	DIAPHRAGM	EPDM, FPM EPDM + PTFE
7	BONNET O-RING	EPDM, FPM N/A
8	FACE O-RING	EPDM, FPM
9	PTFE RING	PTFE N/A
10	BOLT & NUT	SUS 304

NO.	PARTS	MATERIALS
11	WASHER	SUS 304
12	SUS PLATE	SUS 304 N/A
13	SLEEVE	BC
14	STEM	BC
15	INSERTED NUT	BC
16	STOPPER NUTS	SS41 (PLATING : Zn)
17	GAUGE CAP	ACRYL
18	COMPRESSOR	AL
19	PIN	SCM
20	LOCK NUT	PP
21	HAND WHEEL	PP

DIMENSION

unit:mm

Size \ Parts	d1	L	ℓ	H
40A	48.70	289	35.5	208
50A	60.80	330	41.0	230

ASUNG CLEAN FLOW™
Thermo Plastic Valves

DIAPHRAGM VALVE (Flange)

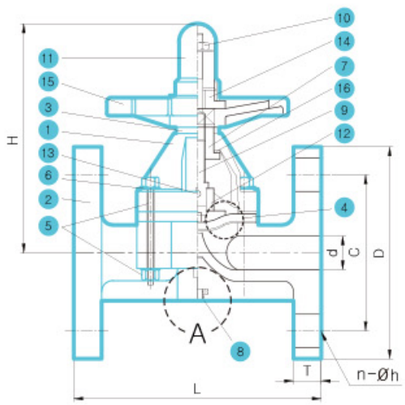

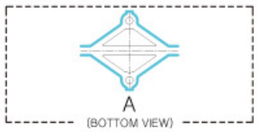

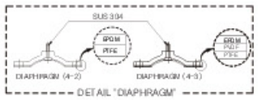

NO.	PARTS	MATERIALS
1	BONNET	CLEAN PVC
2	BODY	CLEAN PVC
3	THRUST WASHER	CLEAN PVC
4-1 4-2 4-3	DAIPHRAGM	EPDM, FPM EPDM + PTFE EPDM + PVDF + PTFE
5	BOLT & NUT	SUS 304
6	WASHER	SUS 304
7	SLEEVE	BC
8	INSERTED NUT	BC
9	STEM+STUD BOLT UNIT	BC + SS41 (PLATING : Zn)
10	STOPPER NUTS	SS41 (PLATING : Zn)
11	GAUGE CAP	ACRYL
12	COMPERSSOR	AL
13	PIN	SCM
14	LOCK NUT	PP
15	HAND WHEEL	PP
16	PTFE RING	PTFE N/A

DIMENSION

unit : mm

Parts / Size	d	L	T	JIS 10K			H
				D	C	n-Øh	
15A	16	113	14	95	70	4-15	131
20A	20	122	15	100	75	4-15	131
25A	25	135	16	125	90	4-19	142
30A	32	145	16	135	100	4-19	150

ASUNG CLEAN FLOW™
Thermo Plastic Valves

DIAPHRAGM VALVE (Flange)

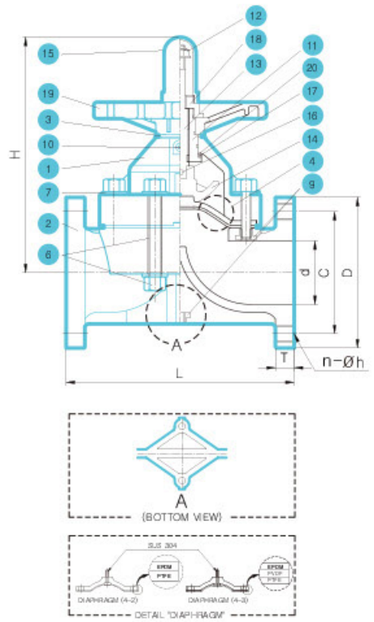

40A~100A

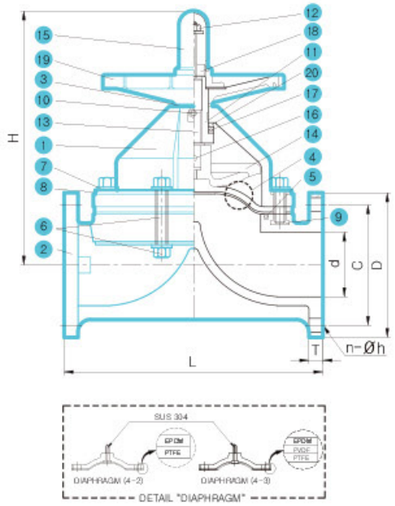

125A~200A

NO.	PARTS	MATERIALS
1	BONNET	CLEAN PVC
2	BODY	CLEAN PVC
3	THRUST WASHER	CLEAN PVC
4-1 4-2 4-3	DAIPHRAGM	EPDM, FPM EPDM + PTFE EPDM + PVDF + PTFE
5	BONNET O-RING	EPDM, FPM N/A
6	BOLT & NUT	SUS 304
7	WASHER	SUS 304
8	SUS PLATE	SUS 304 N/A
9	INSERTED NUT	BC
10	GREASE NIPPLE	15A~50A : N/A 65A~200A : BC

NO.	PARTS	MATERIALS
11	SLEEVE	15A~100A : BC 125A~200A : FC(PALTING:Zn)
12	STOPPER NUTS	SS41 (PALTING : Zn)
13-1 13-2	STEM+STUD BOLTUNIT STEM	BC + SS41 (PALTING : Zn) S45C (PALTING : Zn)
14	COMPERSSOR	15A~100A : AL 125A~200A : FCD
15	GAUGE CAP	ACRYL
16	PIN	SCM
17	THRUST BEARING	15A~80A : N/A 100A~200A : STANDARDIZE
18	LOOK NUT	PP
19	HAND WHEEL	PP
20	PTFE RING	PTFE N/A

DIMENSION

unit : mm

Parts / Size	d	L	T	JIS 10K			H
				D	C	n-Øh	
40A	40	184	17	140	105	4-19	210
50A	52	215	22	155	120	4-19	232
65A	67	254	22	175	140	4-19	265
80A	79	283	23	185	150	8-19	307
100A	101	345	24	210	175	8-19	374
125A	125	415	28	250	210	8-23	427
150A	145	483	29	280	240	8-23	469
200A	193	572	34	330	290	12-23	620

ASUNG CLEAN FLOW™
Thermo Plastic Valves

BUTTERFLY VALVE (Lever Type)

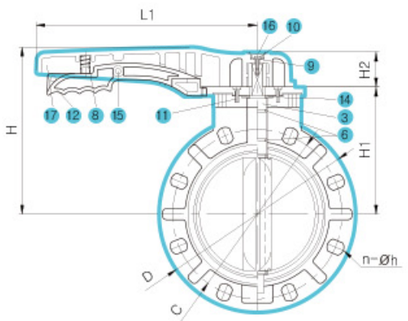

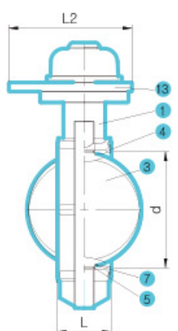

NO.	PARTS	MATERIALS
1	BONNET	CLEAN PVC
2	DISC	CLEAN PVC
3	STEM	SUS 410 SCM4 (CLEAN PVC COATED)
4	SEAT	EPDM, FPM
5	DISC SIDE O-RING	EPDM, FPM
6	STEM O-RING	EPDM, FPM
7	DISC FACE O-RING	EPDM, FPM
8	SPRING	SUS 304
9	WASHER	SUS 304
10	BOLT	SUS 304
11	SCREW	SUS 304
12	LEVER	PPG
13	GEAR PLATE	PPG
14	STEM SUPPORT	PPG
15	SET PIN	PP
16	HANDLE CAP	PP
17	HANDLE	PP (BS INSERT)

DIMENSION

unit:mm

Parts / Size	d	L	L1	L2	D	JIS 10K		H	H1	H2
						C	n-Øh			
40A	49	39	220	111	150	105	4-19	142	102	35
50A	59	42	220	111	165	120	4-19	145	105	35
65A	72	46	220	111	185	140	4-19	157	117	35
80A	72	44	250	111	200	150	8-19	164	123	35
100A	101	56	250	111	229	175	8-19	185	145	35
125A	129	66	323	158	254	210	8-23	229	171	51
150A	150	73	323	158	286	240	8-23	244	186	51
200A	209	94	323	158	343	290	12-23	279	221	51

ASUNG CLEAN FLOW™
Thermo Plastic Valves

BUTTERFLY VALVE (Gear Type)

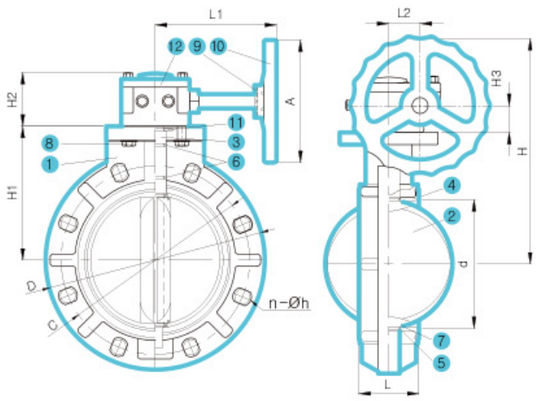

NO.	PARTS	MATERIALS
1	BONNET	CLEAN PVC
2	DISC	CLEAN PVC
3	STEM	SUS 410 SCM4 (CLEAN PVC COATED)
4	SEAT	EPDM, FPM
5	DISC SIDE O-RING	EPDM, FPM
6	STEM O-RING	EPDM, FPM
7	DISC FACE O-RING	EPDM, FPM
8	BOLT	SUS 304
9	SET PIN	SCM
10	HAND WHEEL	PP (S45C INSERTED)
11	STEM SUPPORT	PPG
12	GEAR BOX	ABS + S45C

DIMENSION

unit:mm

Size \ Parts	A	d	L	L1	L2	D	JIS 10K		H	H1	H2	H3
							C	n-Øh				
40A	110	49	39	104	26.5	150	105	4-19	180	96	71	29
50A	110	59	42	104	26.5	165	120	4-19	181	97	71	29
65A	110	72	46	104	26.5	185	140	4-19	192	108	71	29
80A	110	79	44	104	26.5	200	150	8-19	199	115	71	29
100A	151	101	56	119	37.0	229	175	8-19	247	137	85	35
125A	151	129	66	119	37.0	254	210	8-23	271	161	85	35
150A	151	151	73	119	37.0	286	240	8-23	286	176	85	35
200A	196	209	94	174	45.5	343	290	12-23	351	214	86	39

* 200A 이상 SIZE는 문의 하시기 바랍니다.

ASUNG CLEAN FLOW™
Thermo Plastic Valves

CHECK VALVE (Flange)

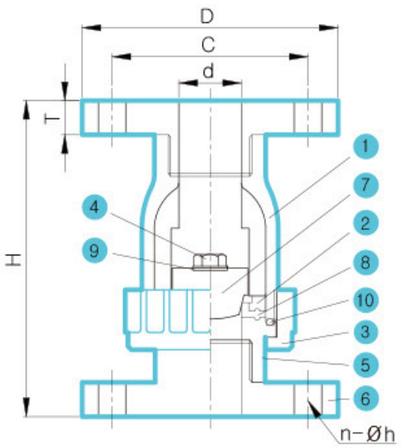

NO.	PARTS	MATERIALS
1	BODY	CLEAN PVC
2	STOP RING	CLEAN PVC
3	GLAND CAP	CLEAN PVC
4	BOLT	CLEAN PVC
5	BODY CAP	CLEAN PVC
6	FLANGE	CLEAN PVC
7	DISC	S45C (CLEAN PVC COATED)
8	SEAT	EPDM, FPM
9	BOLT O-RING	EPDM, FPM
10	FACE O-RING	EPDM, FPM N/A

DIMENSION

unit : mm

Size \ Parts	d	T	H	JIS 10K		
				D	C	n-Øh
15A	14	14	111	95	70	4-15
20A	18	15	132	100	75	4-15
25A	24	16	169	125	90	4-19
40A	37	16	178	140	105	4-19
50A	47	21	225	155	120	4-19

ASUNG CLEAN FLOW™
Thermo Plastic Valves

CHECK VALVE (Flange)

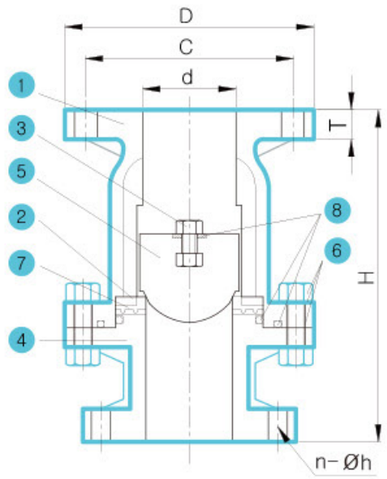

NO.	PARTS	MATERIALS
1	BODY	CLEAN PVC
2	STOP RING	CLEAN PVC
3	BOLT	CLEAN PVC
4	FLANGE	CLEAN PVC
5	DISC	S45C (CLEAN PVC COATED)
6	BOLT & NUT & WASHER	SUS 304
7	SEAT	EPDM, FPM
8	O-RING	EPDM, FPM

DIMENSION

unit : mm

Parts / Size	d	T	H	JIS 10K		
				D	C	n-Øh
65A	66	20	227	175	140	4-19
80A	76	21	243	185	150	8-19
100A	105	23	298	210	175	8-19
125A	130	22	331	250	210	8-23
150A	150	25	394	280	240	8-23
200A	202	29	446	330	290	12-23

ASUNG CLEAN FLOW™
Thermo Plastic Valves

CHECK VALVE (Thread)

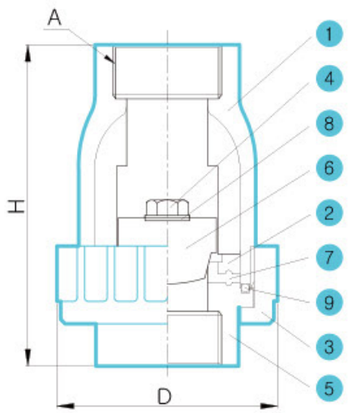

NO.	PARTS	MATERIALS
1	BODY	CLEAN PVC
2	STOP RING	CLEAN PVC
3	GLAND CAP	CLEAN PVC
4	BOLT	CLEAN PVC
5	END CONNECTER 1	CLEAN PVC
6	DISC	S45C (CLEAN PVC COATED)
7	SEAT	EPDM, FPM
8	BOLT O-RING	EPDM, FPM
9	FACE O-RING	EPDM, FPM N/A

DIMENSION

unit:mm

Size \ Parts	H	D	A
15A	83	49	Rc ½"
20A	101	62	Rc ¾"
25A	137	81	Rc 1"
40A	144	98	Rc 1-½"
50A	182	120	Rc 2"

ASUNG CLEAN FLOW™
Thermo Plastic Valves

SWING CHECK VALVE (Flange)

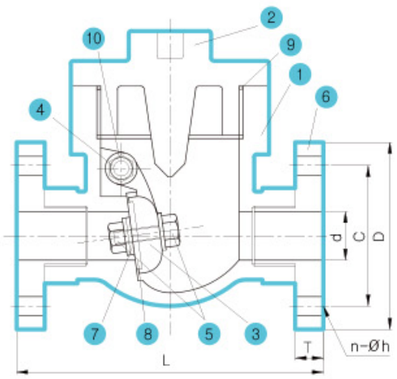

NO.	PARTS	MATERIALS
1	BODY	CLEAN PVC
2	BONNET	CLEAN PVC
3	DISC & SWING ARM	CLEAN PVC
4	SHAFT & BOLT	CLEAN PVC
5	HOLDER BOLT & NUT	CLEAN PVC
6	FLANGE	CLEAN PVC
7	BOLT O-RING	EPDM, FPM
8	SEAT	EPDM, FPM
9	BONNET O-RING	EPDM, FPM
10	O-RING	EPDM, FPM

DIMENSION

unit : mm

Parts / Size	d	L	T	JIS 10K		
				D	C	n-Øh
20A	20	140	15	100	75	4-15
25A	24	161	15	125	90	4-19

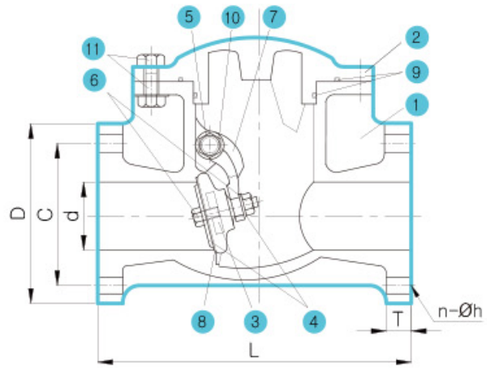

NO.	PARTS	MATERIALS
1	BODY	CLEAN PVC
2	BONNET	CLEAN PVC
3	DISC	CLEAN PVC
4	SEAT SUPPORT	CLEAN PVC
5	SHAFT & BOLT	CLEAN PVC
6	HOLDER BOLT & NUT	CLEAN PVC
7	SWING ARM	CLEAN PVC
8	SEAT	EPDM, FPM
9	BONNET O-RING	EPDM, FPM
10	O-RING	EPDM, FPM
11	BOLT & NUT	SUS 304

DIMENSION

unit : mm

Parts / Size	d	L	T	JIS 10K		
				D	C	n-Øh
40A	40	184	18	140	105	4-19
50A	51	201	21	155	120	4-19
65A	67	243	23	175	140	4-19
80A	77	260	24	180	150	8-19
100A	100	303	25	210	175	8-19

ASUNG CLEAN FLOW™
Thermo Plastic Valves

SWING CHECK VALVE (Flange)

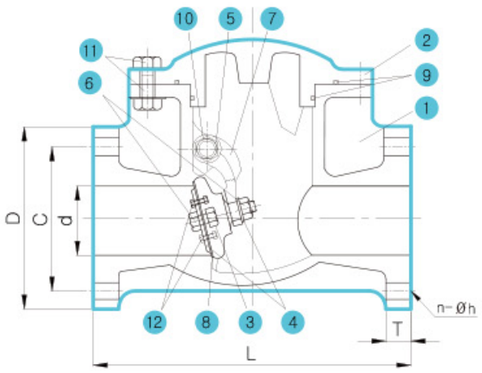

NO.	PARTS	MATERIALS
1	BODY	CLEAN PVC
2	BONNET	CLEAN PVC
3	DISC	CLEAN PVC (SS41 INSERT NUT)
4	SEAT SUPPORT	CLEAN PVC
5	SHAFT & BOLT	CLEAN PVC
6	HOLDER BOLT & NUT	CLEAN PVC
7	SWING ARM	CLEAN PVC
8	SEAT	EPDM, FPM
9	BONNET O-RING	EPDM, FPM
10	O-RING	EPDM, FPM
11	BOLT & NUT	SUS 304
12	BOLT	SS41 (CLEAN PVC COATED)

DIMENSION

unit:mm

Parts / Size	d	L	T	JIS 10K		
				D	C	n-Øh
125A	126	357	28	250	210	8-23
150A	153	408	28	280	240	8-23
200A	204	507	34	330	290	12-23

ASUNG CLEAN FLOW™
Thermo Plastic Valves

SWING CHECK VALVE (Thread)

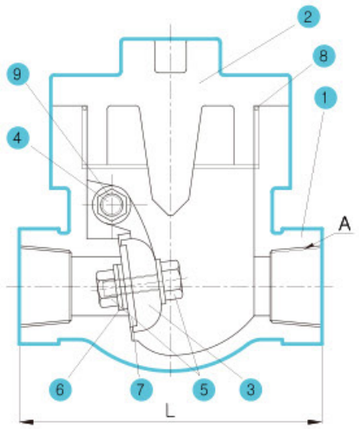

NO.	PARTS	MATERIALS
1	BODY	CLEAN PVC
2	BONNET	CLEAN PVC
3	DISC & SWING ARM	CLEAN PVC
4	SHAFT & BOLT	CLEAN PVC
5	HOLDER BOLT & NUT	CLEAN PVC
6	BOLT O-RING	EPDM, FPM
7	SEAT	EPDM, FPM
8	BONNET O-RING	EPDM, FPM
9	O-RING	EPDM, FPM

DIMENSION

unit : mm

Parts / Size	L	A
20A	112	Rc ¾"
25A	130	Rc 1"

ASUNG CLEAN FLOW™
Thermo Plastic Valves

AUTOMATIC BALL VALVE (Flange)

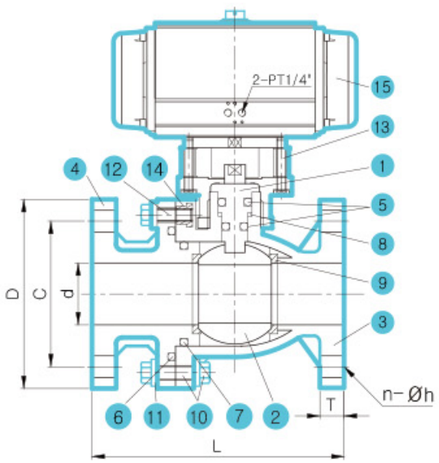

NO.	PARTS	MATERIALS
1	STEM	CLEAN PVC
2	BALL	CLEAN PVC
3	BODY	CLEAN PVC
4	FLANGE	CLEAN PVC
5	STEM O-RING	EPDM, FPM
6	BODY O-RING	EPDM, FPM
7	FLANGE SIDE O-RING	EPDM, FPM
8	STEM RING	PTFE
9	NIP SEAL	PTFE
10	BOLT & NUT	SUS 304
11	WASHER	SUS 304
12	STUD BOLT	SUS 304
13	WRENCH BOLT	SUS 304
14	INSERTED NUT	BC
15	ACTUATOR	ALUMINUM

- Operating fluid
  = Compressd dry air
- Operating pressure
  = 5Bar~7Bar

DIMENSION

unit:mm

Parts / Size	d	L	T	JIS 10K		
				D	C	n-Øh
15A	16	148	15	95	70	4-15
20A	20	152	15	100	75	4-15
25A	25	172	17	125	90	4-19
30A	32	176	16	135	100	4-19
40A	41	193	19	140	105	4-19
50A	51	214	19	155	120	4-19
65A	66	262	21	175	140	4-19
80A	77	270	21	185	150	8-19
100A	102	301	23	210	175	8-19
125A	130	366	27	250	210	8-23
150A	144	364	25	280	240	8-23

ASUNG CLEAN FLOW™
Thermo Plastic Valves

AUTOMATIC DIAPHRAGM VALVE (Flange)

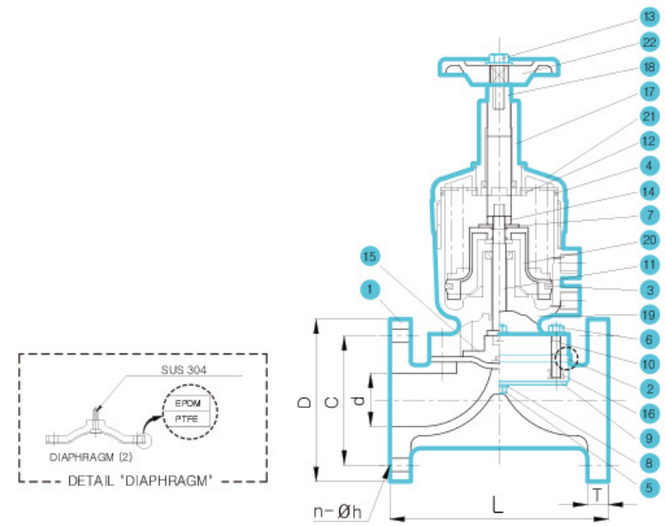

NO.	PARTS	MATERIALS
1	BODY	CLEAN PVC
2	DIAPHRAGM	EPDM, FPM, PTFE
3	PISTON RING	NBR
4	PISTON O-RING	NBR
5	BOLT	SUS 304
6	NUT	SUS 304
7	PISTON STOPPER WASHER	SUS 304
8	WASHER	SUS 304
9	SUS PLATE	SUS 304
10	STUD BOLT	SUS 304
11	STEM	SS41 (NI. COATED)

NO.	PARTS	MATERIALS
12	GAUGE CAP NUT	SS41 (NI. COATED)
13	GAUGE BOLT	SS41 (PP. COATED)
14	PISTON NUT	SS41 (GALVANIZED)
15	COMPRESSOR	15A-50A : AL 65A-100A : FC
16	INSERT NUT	BC
17	GAUGE CAP	BC
18	GAUGE STEM	BC
19	CYLINDER	PPG
20	PISTON	PPG
21	CYLINDER COVER	PPG
22	GAUGE WHEEL	PP

DIMENSION

unit:mm

Parts / Size	d	L	T	JIS 10K		
				D	C	n-Øh
15A	16	113	14	95	70	4-15
20A	20	122	15	100	75	4-15
25A	25	135	16	125	90	4-19
30A	32	145	16	135	100	4-19
40A	40	184	17	140	105	4-15
50A	52	215	22	155	120	4-15
65A	67	254	22	175	140	4-19
80A	79	283	23	185	150	8-19
100A	101	345	24	210	175	8-19

ASUNG CLEAN FLOW™
Thermo Plastic Valves

AUTOMATIC BUTTERFLY VALVE

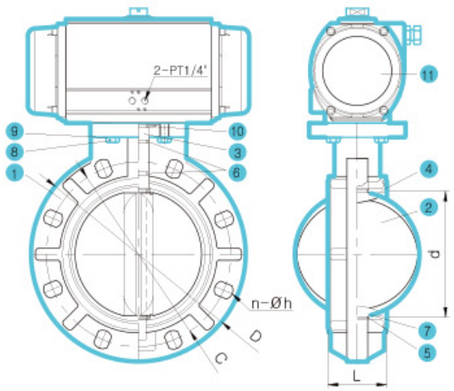

NO.	PARTS	MATERIALS
1	BODY	CLEAN PVC
2	DISC	CLEAN PVC
3	STEM	SUS 410 SCM4 (CLEAN PVC COATED)
4	SEAT	EPDM, FPM
5	DISC SIDE O-RING	EPDM, FPM
6	STEM O-RING	EPDM, FPM
7	DISC FACE O-RING	EPDM, FPM
8	BOLT	SUS 304
9	WASHER	SUS 304
10	STEM SUPPORT	PPG
11	ACTUATOR	ALUMINUM

- Operating fluid
  = Compressd dry air
- Operating pressure
  = 5Bar~7Bar

DIMENSION

unit:mm

Parts / Size	d	L	D	JIS 10K	
				C	n-Øh
40A	49	39	150	105	4-19
50A	59	42	165	120	4-19
65A	72	46	185	140	4-19
80A	79	44	200	150	8-19
100A	101	56	229	175	8-19
125A	129	66	254	210	8-23
150A	151	73	286	240	8-23
200A	209	94	343	290	12-23

ASUNG CLEAN FLOW™

Pipe, Fitting System

Pipe and Fitting for high-purity water and high-purity chemicals

As the IT and bio industries are advancing further, these industries demand ultrapure water of high quality to improve product quality and safety. Many efforts have been made by Asung to develop pipes that have a low level of heavy metal leaching and a high level of smoothness on the inner surface. The company successfully produced Clean PVC products which were accredited with the NeP certificate from the Ministry of Commerce, Industry and Energy and are supplied to manufacturers requiring ultrapure water, including semi-conductor, LCD and PDP manufacturers in Korea. Asung is committed to the ceaseless R&D of pipes, fittings and valve systems geared towards the supply of ultrapure water.

ASUNG CLEAN FLOW™
Thermo Plastic Valves

PIPE

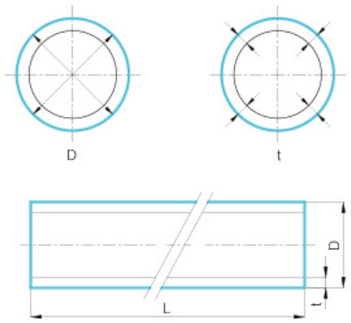

DIMENSION

unit:mm

Parts / Size	D	t	L
15A	22	3.0	
20A	26	3.0	
25A	32	3.5	
30A	38	3.5	
40A	48	4.0	
50A	60	4.5	
65A	76	5.2	4,000
80A	89	5.9	
100A	114	7.1	
125A	140	8.3	
150A	165	9.6	
200A	216	11.0	
250A	267	13.4	

CAP

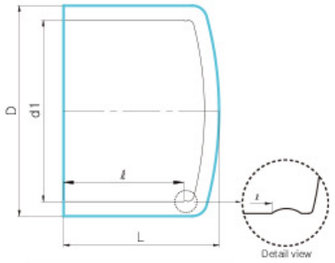

15A~65A

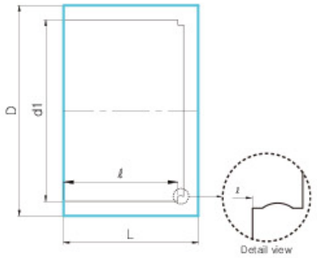

80A

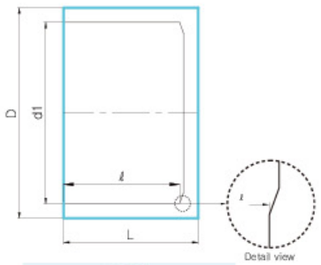

100A

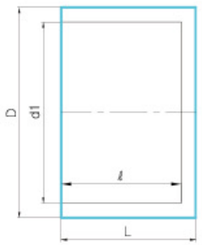

125A~200A

DIMENSION

unit:mm

Parts / Size	D	d1	ℓ	L
15A	30.0	22.40	23.5	31.5
20A	33.0	26.45	27.0	35.5
25A	40.0	32.55	30.0	39.0
30A	46.0	38.60	33.5	43.0
40A	60.0	48.70	36.5	49.0
50A	73.5	60.80	40.0	54.0
65A	89.0	76.60	45.5	62.0
80A	107.5	89.60	48.0	66.0
100A	132.0	114.70	57.0	69.0
125A	162.5	140.85	88.5	109.0
150A	190.5	166.00	99.0	124.0
200A	244.5	216.90	126.0	150.0

ASUNG CLEAN FLOW™
Thermo Plastic Valves

90° ELBOW

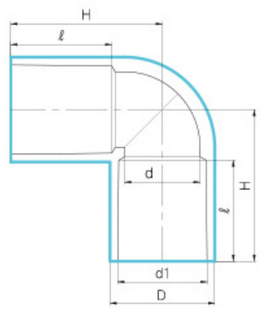

15A~50A

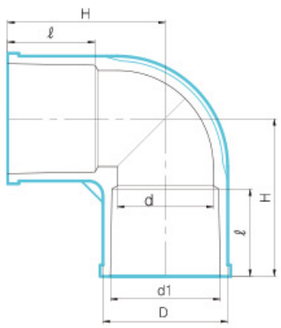

65A~250A

DIMENSION

unit:mm

Size \ Parts	D	d1	d	ℓ	H
15A	29.0	22.40	16	30.5	44.0
20A	33.0	26.45	20	35.5	51.0
25A	40.0	32.55	26	40.5	59.0
30A	46.0	38.60	32	44.5	66.0
40A	57.0	48.70	40	55.5	82.5
50A	70.0	60.80	52	64.0	97.5
65A	87.0	76.60	67	62.0	109.5
80A	103.5	89.60	79	64.5	120.0
100A	131.0	114.70	100	84.5	154.5
125A	159.0	140.85	125	105.0	186.0
150A	187.0	166.00	146	132.5	228.0
200A	243.5	216.90	196	147.5	338.0
250A	299.0	268.10	242	177.0	424.0

45° ELBOW

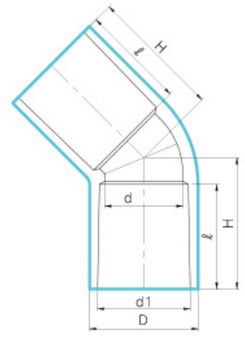

15A~50A

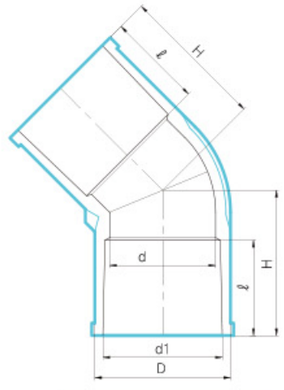

65A~250A

DIMENSION

unit:mm

Size \ Parts	D	d1	d	ℓ	H
15A	29.0	22.40	16	30.5	38
20A	33.0	26.45	21	35.5	44
25A	40.0	32.55	25	40.5	51
30A	46.0	38.60	32	44.5	66
40A	57.0	48.70	40	55.5	69
50A	70.0	60.80	51	63.5	81
65A	87.5	76.60	65	61.5	93
80A	103.5	89.60	79	64.5	98
100A	130.5	114.70	100	84.5	123
125A	159.0	140.85	125	105.0	149
150A	187.5	166.00	146	132.0	184
200A	243.0	219.90	196	147.0	205
250A	299.0	268.10	242	177.0	254

ASUNG CLEAN FLOW™
Thermo Plastic Valves

TEE

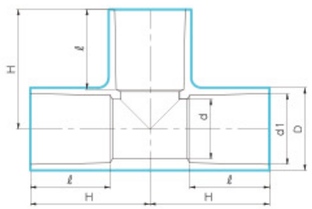

15A~50A

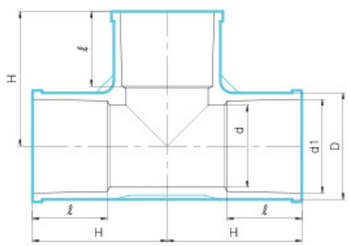

65A~250A

DIMENSION

unit:mm

Size \ Parts	D	d1	d	ℓ	H
15A	29.0	22.40	16	30.5	44.0
20A	33.0	26.45	21	35.5	51.0
25A	40.0	32.55	26	40.5	59.0
30A	46.0	38.60	31	44.5	66.0
40A	57.0	48.70	40	55.5	82.5
50A	70.0	60.80	52	63.5	97.5
65A	87.0	76.60	68	61.5	110.0
80A	103.0	89.60	79	64.5	120.0
100A	130.5	114.70	100	84.0	155.0
125A	159.0	140.85	125	105.0	187.0
150A	188.0	166.00	146	133.0	230.0
200A	243.0	216.90	196	147.0	267.0
250A	299.0	268.10	242	176.0	325.0

REDUCER TEE

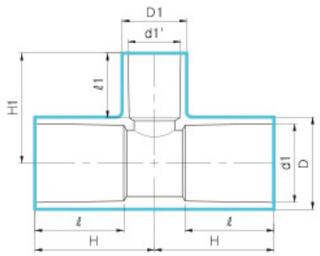

20A×15A~50A×40A

DIMENSION

unit:mm

Size \ Parts	D	d1	ℓ	D1	d1′	ℓ1	H	H1
20A x 15A	33.0	26.45	35.5	29.0	22.40	30.5	51	45
25A x 15A	40.0	32.55	40.5	29.0	22.40	30.5	54	49
25A x 20A	40.0	32.55	40.5	33.0	26.45	35.5	59	53
30A x 15A	46.0	38.60	44.5	29.0	22.40	30.5	66	51
30A x 20A	46.0	38.60	44.5	33.0	26.45	35.0	66	56
30A x 25A	46.0	38.60	44.5	40.0	32.55	40.5	66	61
40A x 15A	57.0	48.70	55.5	29.0	22.40	30.5	74	57
40A x 20A	57.0	48.70	55.5	33.0	26.45	35.5	74	62
40A x 25A	57.0	48.70	55.5	40.0	32.55	40.5	74	68
40A x 30A	57.0	48.70	55.5	46.0	38.60	44.5	83	71
50A x 15A	70.0	60.80	63.5	29.0	22.40	30.5	83	63
50A x 20A	70.0	60.80	63.5	33.0	26.45	35.5	83	68
50A x 25A	70.0	60.80	63.5	40.0	32.55	40.5	83	74
50A x 30A	70.0	60.80	63.5	46.0	38.60	44.5	91	77
50A x 40A	70.0	60.80	63.5	57.0	48.70	55.5	91	89

ASUNG CLEAN FLOW™
Thermo Plastic Valves

REDUCER TEE

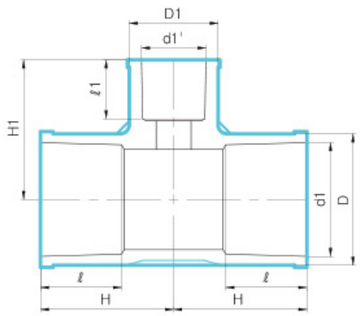

65A×50A~250A×200A

DIMENSION

unit:mm

Size \ Parts	D	d1	ℓ	D1	d1′	ℓ1	H	H1
65A x 50A	87.0	76.60	61.5	70.0	60.80	63.5	110	104
80A x 40A	103.0	89.60	64.5	57.5	48.70	55.5	100	102
80A x 50A	103.5	89.60	64.5	70.5	60.80	63.5	105	110
80A x 65A	103.5	89.60	64.5	87.0	76.60	61.5	120	117
100A x 50A	130.5	114.70	84.5	70.5	60.80	63.5	125	122
100A x80A	130.5	114.70	84.5	103.5	89.60	64.5	140	131
125A x100A	159.0	140.85	104.5	130.5	114.70	84.5	173	166
150A x 80A	187.0	166.00	132.0	103.5	89.60	64.5	194	157
150A x 100A	188.0	166.00	132.0	130.5	114.70	84.5	208	182
150A x 125A	187.0	166.00	132.0	159.0	140.85	104.5	217	201
200A x 100A	243.0	216.90	147.0	130.5	114.70	84.5	218	200
200A x 125A	243.0	216.90	147.0	159.0	140.85	104.5	230	225
200A x 150A	243.0	216.90	147.0	187.0	166.00	132.0	245	257
250A x 65A	299.0	268.10	177.0	103.5	76.60	61.5	240	220
250A x 80A	299.0	268.10	177.0	103.5	89.60	64.5	240	220
250A x 200A	299.0	268.10	177.0	243.0	216.90	147.0	300	295

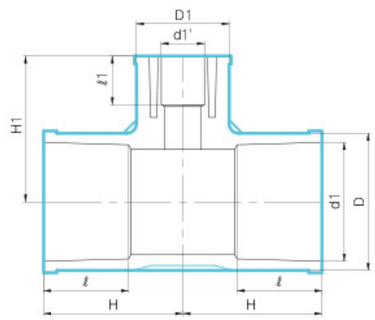

65A×15A~125A×80A

DIMENSION

unit:mm

Size \ Parts	D	d1	ℓ	D1	d1′	ℓ1	H	H1
65A x 15A	87.0	76.60	61.5	70.0	22.40	30.0	110	104
65A x 20A	87.0	76.60	61.5	70.0	22.45	35.0	110	104
65A x 25A	87.0	76.60	61.5	70.0	32.55	40.5	110	104
65A x 30A	87.0	76.60	61.5	70.0	38.60	44.0	110	104
65A x 40A	87.0	76.60	61.5	87.0	48.70	55.5	110	110
80A x 15A	103.0	89.60	64.5	57.0	22.40	30.0	100	102
80A x 20A	103.0	89.60	64.5	57.0	22.45	35.5	100	102
80A x 25A	103.0	89.60	64.5	70.0	32.55	40.5	105	110
80A x 30A	103.0	89.60	64.5	70.5	38.60	44.5	105	110
100A x 15A	130.5	114.70	84.5	70.5	22.40	30.0	125	122
100A x 20A	130.5	114.70	84.5	70.5	26.45	35.0	125	122
100A x 25A	130.5	114.70	84.5	70.5	32.55	40.5	125	122
100A x 30A	130.5	114.70	84.5	70.5	38.60	44.5	125	122
100A x 40A	130.5	114.70	84.5	103.5	48.70	55.5	140	131
100A x 65A	130.5	114.70	84.5	130.5	76.60	61.5	155	155
125A x 15A	159.0	140.85	104.5	130.5	22.40	30.5	173	166
125A x 20A	159.0	140.85	104.5	130.5	22.45	35.0	173	166
125A x 25A	159.0	140.85	104.5	130.5	32.55	40.5	173	166
125A x 30A	159.0	140.85	104.5	130.5	38.60	44.5	173	166
125A x 40A	159.0	140.85	104.5	130.5	48.70	55.5	173	166
125A x50A	159.0	140.85	104.5	130.5	60.80	63.5	173	166
125A x65A	159.0	140.85	104.5	130.5	76.60	61.5	173	166
125A x 80A	159.0	140.85	104.5	159.0	89.60	64.5	187	187

ASUNG CLEAN FLOW™
Thermo Plastic Valves

REDUCER TEE

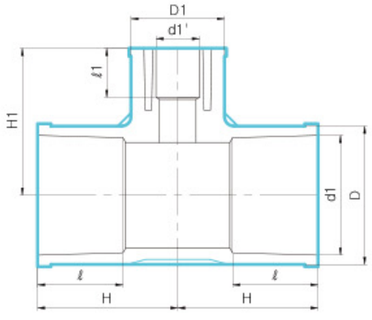

150A×15A~250A×150A

DIMENSION

unit:mm

Size \ Parts	D	d1	ℓ	D1	d1′	ℓ1	H	H1
150A x 15A	187.0	166.00	132.0	103.0	22.40	30.5	195	158
150A x 20A	187.0	166.00	132.0	103.0	26.45	35.5	195	158
150A x 25A	187.0	166.00	132.0	103.0	32.55	40.5	195	158
150A x 30A	187.0	166.00	132.0	103.0	38.60	44.5	195	158
150A x 40A	187.0	166.00	132.0	103.0	48.70	55.5	195	158
150A x 50A	187.0	166.00	132.0	103.0	60.80	62.5	195	158
150A x 65A	187.0	166.00	132.0	130.5	76.60	61.5	207	181
200A x 15A	243	216.90	147	130.5	22.40	30.5	218	200
200A x 20A	243	216.90	147	130.5	26.45	35.5	218	200
200A x 25A	243	216.90	147	130.5	32.55	40.5	218	200
200A x 30A	243	216.90	147	130.5	38.60	44.5	218	200
200A x 40A	243	216.90	147	130.5	48.70	55.5	218	200
200A x 50A	243	216.90	147	130.5	60.80	63.5	218	200
200A x 65A	243	216.90	147	130.5	76.60	61.5	218	200
200A x 80A	243	216.90	147	130.5	89.60	64.5	218	200
250A x 15A	243	216.90	177	103.5	22.40	30.5	240	220
250A x 20A	243	216.90	177	103.5	26.45	35.5	240	220
250A x 25A	243	216.90	177	103.5	32.55	40.5	240	220
250A x 30A	243	216.90	177	103.5	38.60	44.5	240	220
250A x 40A	243	216.90	177	103.5	48.70	55.5	240	220
250A x 50A	243	216.90	177	103.5	60.80	63.5	240	220
250A x 100A	299	268.10	177	243.0	114.70	84.5	300	295
250A x 125A	299	268.10	177	243.0	140.85	104.5	300	295
250A x 150A	299	268.10	177	243.0	166.00	132.0	300	295

REDUCER

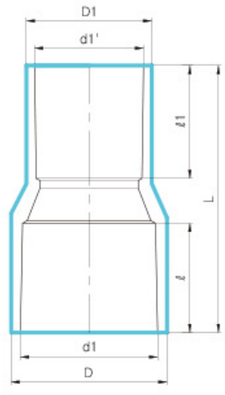

20A×15A~150A×125A

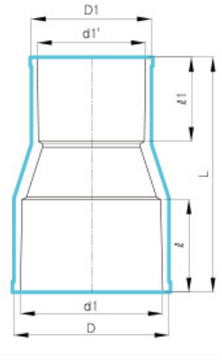

200A×150A~250A×200A

DIMENSION

unit:mm

Size \ Parts	D	d1	ℓ	D1	d1′	ℓ1	L
20A x 15A	33.0	26.45	35.0	29.0	22.40	30.5	71.0
25A x 15A	40.0	32.55	40.0	29.0	22.40	30.5	85.0
25A x 20A	40.0	32.55	40.5	33.0	26.45	35.5	84.0
30A x 15A	46.0	38.60	44.5	33.0	22.40	30.5	93.0
30A x 20A	46.0	38.60	44.5	33.0	26.45	35.5	93.0
30A x 25A	46.0	38.60	44.5	40.0	32.55	40.5	93.0
40A x 15A	57.0	48.70	55.5	29.0	22.40	30.5	113.0
40A x 20A	57.0	48.70	55.5	33.0	26.45	35.5	113.0
40A x 25A	57.0	48.70	55.5	40.0	32.55	40.5	114.0
40A x 30A	57.0	48.70	55.5	46.0	38.60	44.5	114.0
50A x 15A	70.0	60.80	63.5	40.0	22.40	30.5	140.0
50A x 20A	70.0	60.80	63.5	40.0	26.45	35.5	140.0
50A x 25A	70.0	60.80	63.5	40.0	32.55	40.5	140.0
50A x 30A	70.0	60.80	63.5	46.0	38.60	44.5	136.0
50A x 40A	70.0	60.80	63.5	57.0	48.70	55.5	136.0
65A x 40A	87.0	76.60	61.5	70.0	48.70	55.0	149.0
65A x 50A	87.0	76.60	61.5	70.0	60.80	63.5	149.0
80A x 40A	103.0	89.60	64.5	70.0	48.70	55.0	164.0
80A x 50A	103.0	89.60	64.5	70.0	60.80	63.5	165.0
80A x 65A	103.0	89.60	64.5	87.0	76.60	61.5	159.0
100A x40A	130.5	114.70	85.0	70.0	48.70	55.5	200.0
100A x50A	130.5	114.70	85.0	70.0	60.80	63.5	200.0
100A x 65A	130.5	114.70	85.0	103.0	76.60	58.0	186.5
100A x 80A	130.5	114.70	85.0	103.0	89.10	64.5	190.0
125A x 80A	159.0	140.85	105.0	103.0	89.60	64.5	229.0
125A x 100A	159.0	140.85	105.0	130.5	114.70	85.0	229.0
150A x 80A	188.0	166.00	133.0	130.5	89.60	64.5	229.0
150A x 100A	188.0	166.00	133.0	130.5	114.70	85.0	229.0
150A x 125A	188.0	166.00	133.0	159.0	140.85	105.0	271.5
200A x 150A	243.0	216.90	147.0	188.0	166.00	133.0	367.0
250A x 200A	298.0	268.10	176.0	243.0	216.90	147.0	399.0

ASUNG CLEAN FLOW™
Thermo Plastic Valves

REDUCER

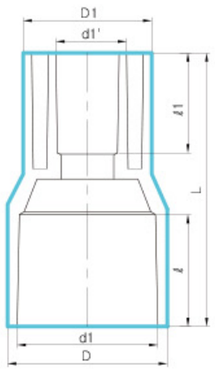

65A×15A~150A×65A

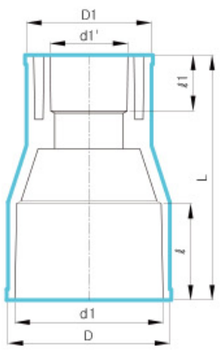

200A×80A~250A×150A

DIMENSION

unit:mm

Size \ Parts	D	d1	ℓ	D1	d1′	ℓ1	L
65A x 15A	87.0	76.60	61.5	70.0	22.40	30.0	149.0
65A x 20A	87.0	76.60	61.5	70.0	26.45	35.0	149.0
65A x 25A	87.0	76.60	61.5	70.0	32.55	40.0	149.0
65A x 30A	87.0	76.60	61.5	70.0	38.60	44.0	149.0
80A x 15A	103.5	89.60	64.5	70.0	22.40	30.0	165.0
80A x 20A	103.5	89.60	64.5	70.0	26.45	35.0	165.0
80A x 25A	103.5	89.60	64.5	70.0	32.55	40.0	165.0
80A x 30A	103.5	89.60	64.5	70.0	38.60	44.0	165.0
100A x 15A	130.5	114.70	85.0	70.0	22.40	30.0	200.0
100A x 20A	130.5	114.70	85.0	70.0	26.45	35.0	200.0
100A x 25A	130.5	114.70	85.0	70.0	32.55	40.0	200.0
100A x 30A	130.5	114.70	85.0	70.0	38.60	44.5	200.0
125A x 15A	159.0	140.85	105.0	103.5	22.40	30.0	229.0
125A x 20A	159.0	140.85	105.0	103.5	26.45	35.0	229.0
125A x 25A	159.0	140.85	105.0	103.5	32.55	40.5	229.0
125A x 30A	159.0	140.85	105.0	103.5	38.60	44.5	229.0
125A x 40A	159.0	140.85	105.0	103.5	48.70	55.5	229.0
125A x 50A	159.0	140.85	105.0	103.5	60.80	63.5	229.0
125A x 65A	159.0	140.85	105.0	103.5	76.60	61.5	229.0
150A x 15A	188.0	166.00	132.0	103.5	22.40	30.5	295.0
150A x 20A	188.0	166.00	132.0	103.5	26.45	35.5	295.0
150A x 25A	188.0	166.00	132.0	103.5	32.55	40.5	295.0
150A x 30A	188.0	166.00	132.0	103.5	38.60	44.5	295.0
150A x 40A	188.0	166.00	132.0	103.5	48.70	55.5	295.0
150A x 50A	188.0	166.00	132.0	130.5	60.80	63.5	295.0
150A x 65A	188.0	166.00	132.0	130.5	76.60	61.5	295.0
200A x 80A	243.0	216.90	147.0	188.0	89.60	64.5	368.0
200A x 100A	243.0	216.90	147.0	188.0	114.70	84.5	368.0
200A x 125A	243.0	216.90	147.0	188.0	140.85	104.5	368.0
250A x 80A	299.0	268.10	176.0	243.0	89.60	64.5	399.0
250A x 100A	299.0	268.10	176.0	243.0	114.70	84.5	399.0
250A x 125A	299.0	268.10	176.0	243.0	140.85	104.5	399.0
250A x 150A	299.0	268.10	176.0	243.0	166.00	132.0	399.0

SOCKET

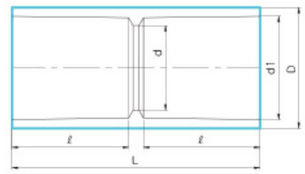

15A~50A

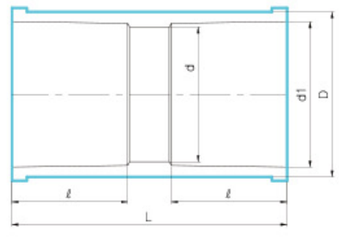

65A~250A

DIMENSION

unit:mm

Size \ Parts	D	d1	d	ℓ	L
15A	29.0	22.40	16	30.5	67
20A	33.0	26.45	20	35.5	77
25A	40.0	32.55	25	40.5	87
30A	46.0	38.60	31	44.5	95
40A	57.0	48.70	40	55.5	117
50A	70.0	60.80	51	64.0	137
65A	87.0	76.60	65	61.5	145
80A	103.5	89.60	77	64.5	155
100A	130.5	114.70	100	84.5	200
125A	158.5	140.85	125	105.0	239
150A	187.5	166.00	146	132.5	300
200A	242.5	216.90	196	146.5	308
250A	298.5	268.10	242	177.0	384

ASUNG CLEAN FLOW™
Thermo Plastic Valves

FAUCET SOCKET

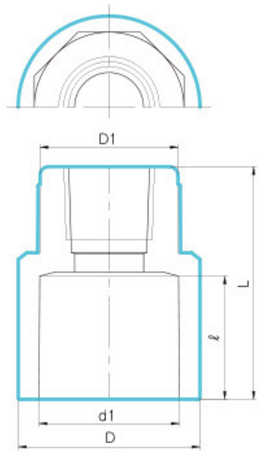

25A~½"

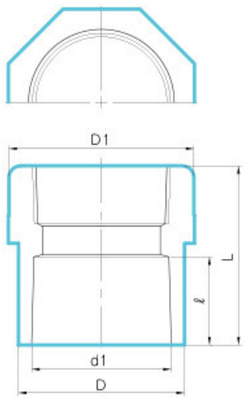

15A×⅜"~25A×1"

DIMENSION

unit:mm

Size \ Parts	D	d1	ℓ	L	D1
15A x ⅜"	29.5	22.40	22.5	44.0	33.5
15A x ½"	29.5	22.40	22.5	44.0	33.5
20A x ½"	34.5	26.45	25.5	53.0	40.0
20A x ¾"	34.5	26.45	25.5	53.0	40.0
25A x ½"	43.0	32.55	28.5	57.5	33.5
25A x 1"	43.0	32.55	28.5	60.5	48.0

MALE ADAPTER

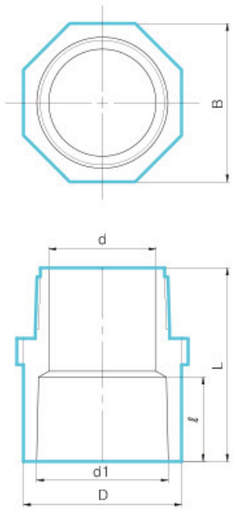

DIMENSION

unit:mm

Size \ Parts	D	d1	d	ℓ	L	B
15A x ½"	29.0	22.40	13	22.5	46.5	29
20A x ¾"	36.0	26.45	18	25.5	53.5	36
25A x 1"	42.5	32.55	24	29.0	59.0	43
30A x 1-¼"	46.0	38.60	31	32.5	66.5	46
40A x 1-½"	57.0	48.70	38	37.5	74.0	60
50A x 2"	70.0	60.80	48	44.0	87.0	73

ASUNG CLEAN FLOW™
Thermo Plastic Valves

UNION (Socket)

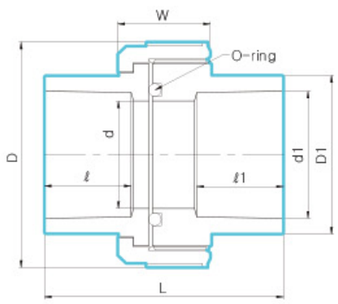

15A~50A

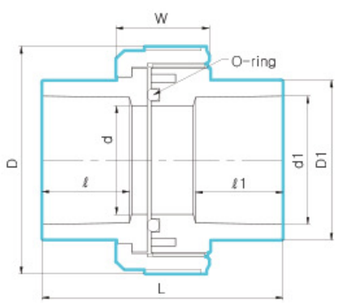

65A~100A

DIMENSION

unit:mm

	Parts / Size	D	D1	d1	d	ℓ	ℓ1	W	L
A-TYPE	15A	49.0	30.5	22.40	15	22.5	23.0	27.0	60.0
	20A	60.0	36.5	26.45	20	24.0	26.0	28.0	69.5
	25A	70.5	46.0	32.55	25	32.0	29.0	33.5	85.5
	30A	81.0	55.0	38.60	30	30.0	32.5	34.5	84.5
	40A	97.5	65.0	48.70	40	35.5	35.5	40.0	102.0
	50A	107.0	75.0	60.80	51	41.0	39.0	45.0	114.5
B-TYPE	15A	50.5	30.5	22.40	15	22.5	23.0	27.0	60.0
	20A	60.0	36.5	26.45	20	24.0	26.0	28.0	69.5
	25A	70.5	46.0	32.55	25	32.0	29.0	33.5	85.5
	30A	81.0	55.0	38.60	30	30.0	32.5	34.5	84.5
	40A	97.5	65.0	48.70	40	35.5	35.5	40.0	101.5
	50A	113.5	75.0	60.80	51	41.0	39.0	45.0	114.0
	65A	133.0	89.5	76.60	66	44.5	43.0	49	121.5
	80A	153.0	106.0	89.60	78	54.5	54.5	65	149.0
	100A	210.5	134.0	114.70	100	67.0	67.0	83	167.0

* A-TYPE is no compatible with B-TYPE

UNION (Thread)

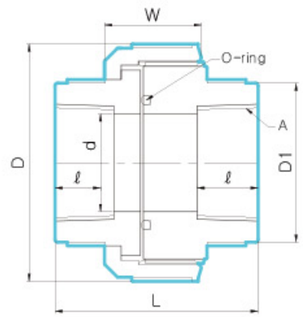

DIMENSION

unit:mm

Parts / Size	D	D1	A	d	ℓ	W	L
15A	49	30	Rc ½"	15	14.0	25.0	49.0
20A	60	36	Rc ¾"	20	16.0	28.0	56.5
25A	70	46	Rc 1"	25	20.0	34.0	66.0
30A	81	55	Rc 1-¼"	31	21.5	34.5	71.0
40A	97	65	Rc 1-½"	40	24.0	40.0	83.0
50A	107	75	Rc 2"	51	28.5	44.0	93.5

ASUNG CLEAN FLOW™
Thermo Plastic Valves

T.S FLANGE

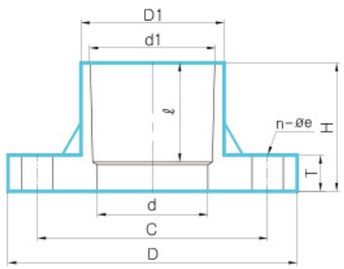

DIMENSION

unit:mm

Parts / Size	SOCKET DIMENSIONS					FLANGE MIDENSIONS			
	D	d1	d	ℓ	H	D	C	T	n-øe
15A	32.0	22.40	18	31.0	46	95	70	14	4-15
20A	35.0	26.45	21	35.0	46	100	75	15	4-15
25A	42.5	32.55	25	41.0	46	125	90	15	4-19
30A	53.5	38.60	31	45.0	50	135	100	16	4-19
40A	61.0	48.70	41	56.0	60	140	105	16	4-19
50A	75.0	60.80	51	63.0	70	155	120	20	4-19
65A	87.5	76.60	68	61.0	77	175	140	22	4-19
80A	103.0	89.60	78	63.5	81	185	150	22	8-19
100A	131.0	114.70	102	85.0	100	210	175	22	8-19
125A	160.0	140.85	127	105.0	120	250	210	25	8-23
150A	189.5	166.00	148	132.0	151	280	240	27	8-23
200A	242.0	216.90	196	146.0	158	330	290	29	12-23
250A	295.0	268.10	244	174.0	187	400	355	29	12-25

BLIND FLANGE

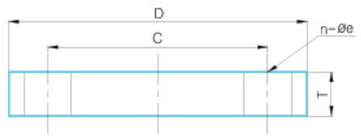

DIMENSION

unit:mm

Parts / Size	D	C	T	n-øe
15A	95	70	14	4-15
20A	100	75	15	4-15
25A	125	90	15	4-19
30A	135	100	16	4-19
40A	140	105	16	4-19
50A	155	120	17	4-19
65A	175	140	19	4-19
80A	185	150	19	8-19
100A	210	175	19	8-19
125A	250	210	21	8-23
150A	280	240	22	8-23
200A	330	290	28	12-23
250A	400	355	30	12-25